WATER SHEET Cascade spout for wall mounting - Brushed Champagne (22kt Gold)

IMO

13 415 979 Product version from 10/1/2023

- 150mm projection
- CASCADE, max. flow rate 26.5 l/min (at 3 bar)
- cover plate 240 x 60 mm
- 1/2" connection
- plug-link mounting
- WRAS

Fits: IMO, LULU, MADISON, MEM, TARA, CL.1, LISSÉ, VAIA, META, CYO

Brushed Champagne (22kt Gold)	13 415 979-46
Chrome	13 415 979-00
Brushed Platinum	13 415 979-06
Platinum	13 415 979-08
Dark Chrome	13 415 979-19
Light Gold	13 415 979-26
Brushed Light Gold	13 415 979-27
Brushed Durabrass (23kt Gold)	13 415 979-28
Matte Black	13 415 979-33
Brushed Bronze	13 415 979-42
Champagne (22kt Gold)	13 415 979-47
Brushed Chrome	13 415 979-93
Brushed Dark Platinum	13 415 979-99

Recommended miscellaneous

Concealed wall elbow - 35 085 970 90
●max. recess depth mm
●min. recess depth mm

Recommended miscellaneous

Concealed wall elbow - 35 085 970 90
●max. recess depth mm
●min. recess depth mm

WATER SHEET Cascade spout for wall mounting - Brushed Champagne (22kt Gold)

IMO

13 415 979 Product version from 10/1/2023

mm [inches]

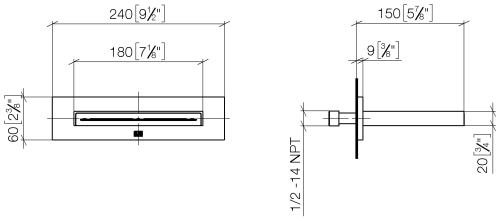

Flow rate chart

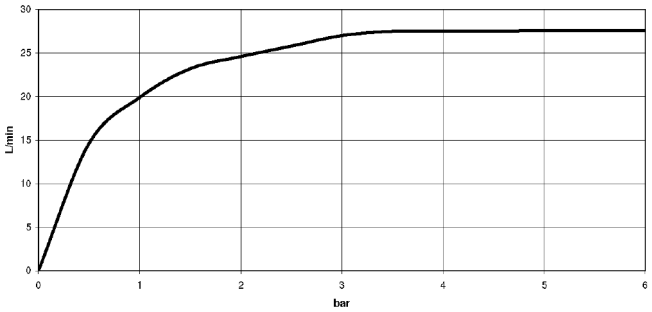

Trajectory diagram

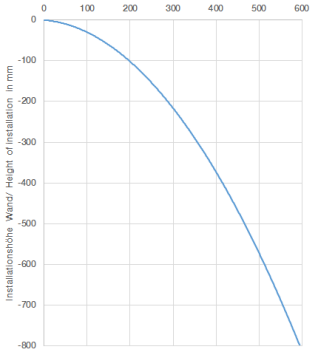

Codes & Standards

Scottish Water Byelaws	UK Water Supply Regulations

Certificates

WRAS_2306

WATER SHEET Cascade spout for wall mounting - Brushed Champagne (22kt Gold)

IMO

13 415 979 Product version from 10/1/2023

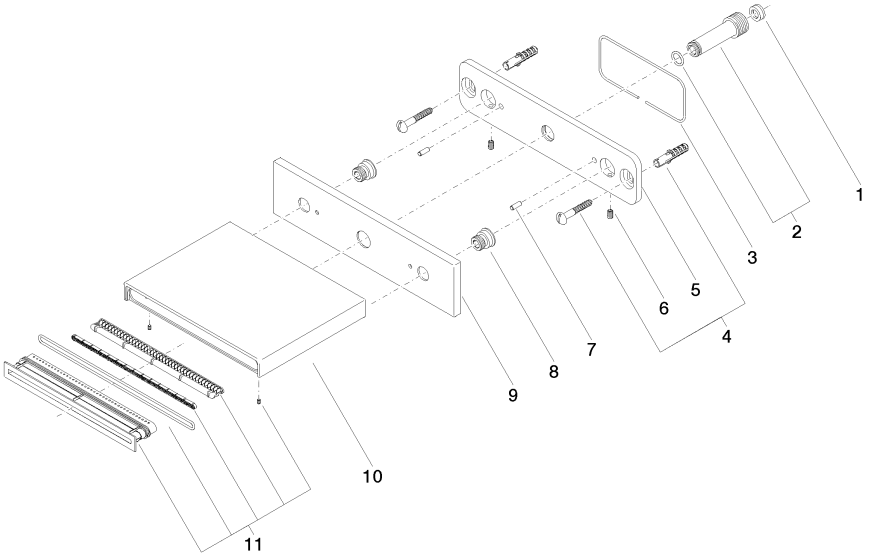

Spare parts list

No.	Item Number	Name	Quantity used	Delivery time
1	09 23 01 057 90	flow reducer	1	2
2	90 24 03 213 00 90	connection	1	2
3	09 14 03 134 90	seal	1	2
4	04 30 31 024 01 90	fixing set	1	2
5	09 17 97 059 90	holder	1	2
6	09 31 11 036 90	pin	2	2
7	09 31 11 040 90	pin	2	2
8	09 24 03 214 90	nipple	2	2
9	09 27 78 031-46	rosette	1	30
10	09 11 78 003 20-46	spout	1	30
11	90 29 03 059 00 90	insert	1	2

We reserve the right to change designs, product range and technical specifications without prior notice.
More information can be found at: www.dornbracht.com +49 (0) 2371 8899 900 mail@dornbracht.com